LOGUS MICROWAVE

HIGH POWER COAXIAL SWITCHES, TYPE "N"

HOC12G SERIES

SPDT Relay style DC to 4 GHz family.

The HC12G series offers reliability and performance in SPDT switching utilizing High Power "N" connector styles.

This DC to 4 GHz series covers typical applications in telecommunications, cellular, mobile radio and ATE.

The following pages comprise a variety of sample models commonly used.

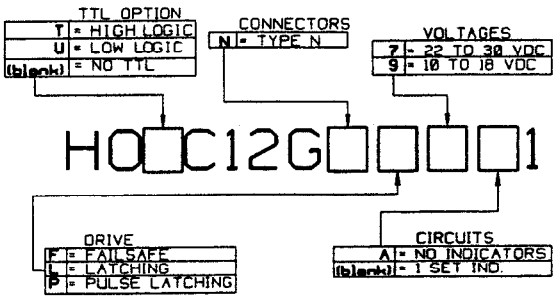

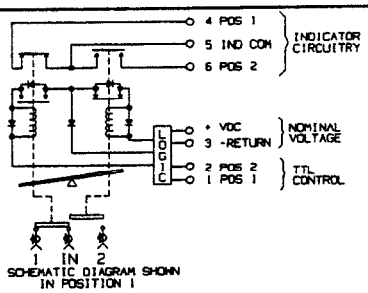

SPECIFICATIONS
MICROWAVE

FREQUENCY RANGE GHz	DC TO 0.5	0.5 TO 1	1 TO 2	2 TO 3	3 TO 4
V.S.W.R. MAX	1.10:1	1.15:1	1.2:1	1.3:1	1.4:1
INSERTION LOSS MAX	0.2 dB	0.2 dB	0.2 dB	0.3 dB	0.4 dB
ISOLATION MIN	80 dB	80 dB	80 dB	70 dB	70 dB
POWER MAX CW	1200	800	600	500	400

IMPEDANCE 50 OHM

ELECTRICAL:
VOLTAGE 22 TO 30 VDC
CURRENT 150 mA MAX @28 VDC @ 20°C
TTL LOGIC VOLTAGE LOW: 0 TO 0.8 VDC
VOLTAGE HIGH: 2.4 TO 5.5 VDC
CURRENT LOW: 0 mA
CURRENT HIGH: 1.75 mA MAX @ 5 V

SWITCHING TIME 20 MILLISECONDS MAX.

MECHANICAL:
MATERIAL ALUMINUM (RF ASSY)
RF CONTACTS BREAK-BEFORE MAKE
FINISH IRIDITE PER MIL-C-5541
PAINT DULL BLACK ENAMEL
LIFE 1.000.000 CYCLES MIN.

ENVIRONMENTAL:
TEMP. OPERATING 0°C TO +70°C
NON-OPERATING -40°C TO +100°C
HUMIDITY 0 TO 95%. NO CONDENSATION

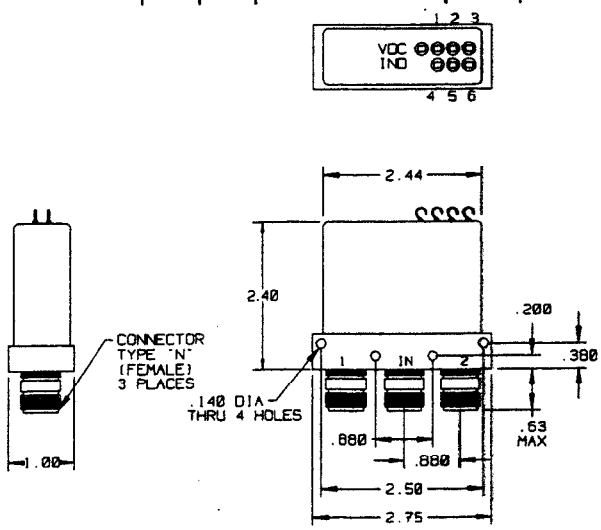

REVISIONS

ECN	LTR	DESCRIPTION	DATE	APPROVED

UNLESS OTHERWISE SPECIFIED DIMENSIONS ARE IN INCHES
TOLERANCES
DECIMAL: PLACE ±.010 / ±.010 / ±.005 / ±.005
FRACTIONS: ± 1/64 / ± 1/64
ANGLES 1/2 DEG.
MATERIAL:
FINISH:

NEXT ASSY | USED ON
APPLICATION

MODEL # HOTC12GNL71
DRAWN 8/12/96 Lis
CHECKED 8/20/96 B.O.
APPROVED
APPROVED

LOGUS MICROWAVE
HIGH POWER COAXIAL SWITCH.
SPDT. TYPE "N". LATCHING.
TTL. W/INDICATORS

B 09080 B 10131-4 REV.
SCALE | UNIT WT | SHEET 1 OF 1

HOTC12GNL71